2021 IEEE 30th Asian Test Symposium (ATS) | 978-1-6654-4051-6/21/$31.00 ©2021 IEEE | DOI: 10.1109/ATS52891.2021.00022

Detection of Stuck-at and Bridging Fault in Reversible Circuits using an Augmented Circuit

1st Mousum Handique
Department of CSE, TSSOT
Assam University
Silchar, Assam, India
mousum.smit@gmail.com

2nd Jantindra Kumar Deka
Department of CSE
Indian Institute of Technology Guwahati
Guwahati, Assam, India
jatin@iitg.ac.in

3rd Santosh Biswas
Department of EECS
Indian Institute of Technology Bhilai
Bhilai, Chhattisgarh, India
santosh@iitbhilai.ac.in

***Abstract*—Low-power design is a major concern in the circuit design domain. The reversible circuit is an alternative for moving beyond the conventional ways of computing. For performing the high reliability and the correctness of the circuit, testing is necessary for evaluating the faults. This paper presents the fault detection method for classical fault models like stuck-at faults and bridging faults in reversible circuits using the negative-controlled augmented k-CNOT based circuit. We initially construct the n number of test vectors with n input lines for a given circuit. The constructed test vector sequences successfully attempt as the complete test set on the testable design augmented k-CNOT circuit for detecting faults. The proposed method applies to several benchmark circuits for detecting the stuck-at and bridging faults and also comparative analysis is prepared with some existing works.**

***Index Terms*—Reversible circuit, stuck-at fault, bridging fault, complete test set, augmented k-CNOT circuit**

I. Introduction

In present-day technology, the power dissipation increases rapidly due to reducing the chips' size and increasing the computation speed and package density. Though several methods have been introduced for low power design, still power dissipation of the conventional logic circuit is becoming a major issue. Researchers are exploring alternative ways to implement the computation function in the computing device for handling these difficulties that appear in a conventional computation. In conventional logic circuits, the number of input lines is not similar to the output lines, as results the information is lost or change of bit information. In 1961, R Landauer showed that the changing of one bit of information, the amount of energy required $kTln2$ Joules. It is also known as Landauer limit [1], here k is representing the Boltzmann constant and T is the system temperature in Kelvins. In 1973, Charles H. Bennet [2] showed that reversible computation is capable of performing lossless information. Reversible computation is computing based on the reversible function. In reversible function, the number of input is equal to the number of output and uniquely retrievable from each other, i,e., bijective in nature [3]. The reversible functions are also implemented by the various types of reversible logic gates, and these gates are used in reversible logic. Therefore, researchers explore reversible logic as a circuit design alternative gaining more popularity in recent times.

Circuit design domain, the faults are considered any imperfection in a circuit that may affect the functional behavior of a system. Thus, even the occurrence of a single fault directly affects the desired performance of a system. To analyze the faults, we need some abstract representations for evaluating faults and these abstract representations have been depicted in an engineering model, called a fault model. In other words, a fault model helps to describe the functional behavior of the various level of abstraction and also helps to simplify the complexity of the testing procedure during circuit testing [4]. Various fault models have been introduced in reversible circuits, and some of the fault models are common in conventional circuits and reversible circuits. The discussion of various fault models in reversible circuits and their correlations are discussed in [5].

Testing is an experiment to analyze the correct behavior and proper functioning of a system. In general, two phases are involved in the testing procedure. Fault detection is the first phase for detecting faults in the circuit, and fault localization appears later to determine the exact location of faults. The generation of test vectors applies to the circuit to observe the faulty-free and faulty circuit's functional behavior. If the set of test vectors can detect all the possible faults in the circuit then a test set is called the complete test set. The controllability and observability properties [6] are maintained by the reversible circuit. Thus, the test generation process for a reversible circuit is straightforward.

Several fault detection approaches have been introduced in the literature [6]–[15] that address the complete test set generation for different fault models in reversible circuits. The main objective of the present work is to generate the complete test set and apply it to the testable augmented reversible circuit for detecting more than one type of fault model in a given circuit. In this connection, the proposed fault detection technique provides the solution to detect all possible stuck-at and bridging faults in k-CNOT based reversible circuits.

The rest of the paper is organized as follows: Section II includes the basic preliminaries about the reversible logic function and gates and the k-CNOT reversible circuit. This section also provides the basic background of classical fault models in the reversible circuit and related work on fault detection under these fault models. In Section III, we present the proposed

2377-5386/21/$31.00 ©2021 IEEE
DOI 10.1109/ATS52891.2021.00022

Authorized licensed use limited to: SARDAR VALLABHBHAI NATIONAL INSTITUTE OF TECH. Downloaded on August 05,2025 at 10:03:53 UTC from IEEE Xplore. Restrictions apply.

fault detection technique in detail. Section IV includes the experimental results. Finally, concluding remarks and some of the possible future work are presented in Section V.

II. PRELIMINARIES

A. Reversible Function and Basic Gates

A reversible function $f : \mathbb{B}^n \Rightarrow \mathbb{B}^m$ with $\mathbb{B} \in \{0, 1\}$ and $n, m \in \mathbb{N}$ ($\mathbb{N}$ denotes a set of natural numbers) that allows each input vector uniquely mapping to the output vector, and also the number of input vectors are equal to the output vectors (i.e., n=m). Hence, the reversible function realizes a bijective function. The reversible logic operations are used to implement the reversible logic functions, which are formulated by the reversible gates. Some of the basic reversible logic gates are NOT gate, Controlled-NOT (CNOT) gate, or FEYNMAN gate [16], TOFFOLI gate [17], and Multiple-control Toffoli (MCT) or k-CNOT gate [17]. The NOT gate consists 1-input and 1-output, i.e., 1×1 gate. Fig. 1.(a) shows the input x_1 determines the output $\bar{x_1}$ that maps $x_1 \rightarrow x_1 \oplus 1$. The CNOT is a 2×2 gate. The CNOT is the combination of one positive control line (•) and target line ($\oplus$). The operation of the CNOT gate realizes $(x_1, x_2) \rightarrow (x_1, x_1 \oplus x_2)$ as shown in Fig. 1.(b). The TOFFOLI is a 3×3 gate. The operation of TOFFOLI gate represented as $(x_1, x_2, x_3) \rightarrow (x_1, x_2, x_1x_2 \oplus x_3)$ which is depicted in Fig. 1.(c). The MCT gate is also known as k-CNOT gate is shown in Fig. 1.(d). Here, k is the number of control lines $x_1, x_2, \ \ldots, x_{n-1}$ and there is only one target line x_n. Thus, k-CNOT gate has k+1-inputs and k+1 outputs. Here, k-CNOT gate also consists of only positive control lines (•), or only negative control lines (○), or the combination of positive and negative control lines. The target output line is only inverted when positive (negative) control lines are set logic value '1' ('0'). The reversible logic function of k-CNOT gate is expressed as $(x_1, x_2, \ \ldots, x_{n-1}, x_n) \rightarrow (x_1, x_2, \ \ldots, x_{n-1}, x_1.x_2 \ \ldots x_{n-1} \oplus x_n)$.

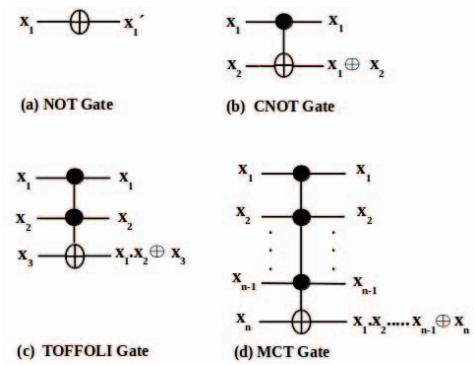

Fig. 1. Basic Reversible Gates

B. Reversible Circuits comprised of k-CNOT Gates

The reversible circuit structure is the linear cascade of reversible gates with no feedback and fanout connection [18]. In this work, we consider only k-CNOT circuits that are constructed the k-CNOT gates. The authors in [19] have proved that the k-CNOT gates can be realized in any reversible function. Here, Fig. 2 illustrates the network structure of the k-CNOT circuit with four inputs and four k-CNOT gates and their corresponding primary outputs.

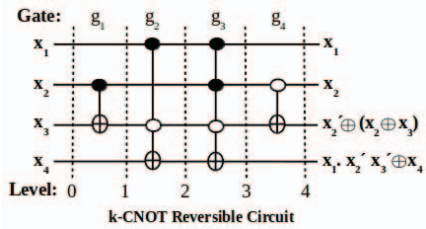

Fig. 2. Structure of k-CNOT Reversible Circuit

C. Fault Models

For evaluating the physical defects of a system, the mathematical model is formulated based on the abstract representations of these physical defects. The representation of the mathematical model is called a fault model. Some of the fault models for reversible circuits are stuck-at fault [6], Bridging fault [9], Missing Gate fault [7], [8]. In this work, we consider the stuck-at and bridging fault model in reversible circuits.

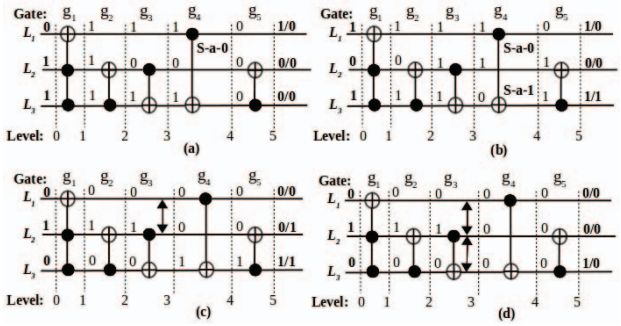

Fig. 3. Illustration of Stuck-at and Bridging faults for $ham3_tc$ Reversible Circuit

1) Stuck-at Fault model: The structural behavior of the stuck-at fault model in conventional circuits is also used in reversible circuit testing. The occurrence of stuck-at faults is presented when one of its inputs or outputs are stuck with logic value '0' (stuck-at-0) or logic value '1' (stuck-at-1) [4]. If the stuck-at fault appears only one line, then it refers to the single stuck-at fault (SSF), and if the stuck-at faults appear more than one line, then it considered multiple stuck-at faults (MSF). The test set is sufficient enough for detecting the stuck-at faults where the logic value sets each line of every level of the reversible circuit '0' and '1' [6].

Fig. 3 (a) and (b) show the effect of SSF and MSF in $ham3_tc$ circuit, respectively. In Fig. 3 (a), the input line L_1 stuck with the logic value 0 (stuck-at 0) at level 4. Therefore, the primary output at level 5 is effected. Here, the input test

Authorized licensed use limited to: SARDAR VALLABHBHAI NATIONAL INSTITUTE OF TECH. Downloaded on August 05,2025 at 10:03:53 UTC from IEEE Xplore. Restrictions apply.

vector $\langle 0\ 1\ 1 \rangle$ is applied to the circuit. Due to the SSF, the faulty output $\langle 0\ 0\ 0 \rangle$ is generated instead of fault-free output $\langle 1\ 0\ 0 \rangle$ at the primary output level. Fig. 3 (b) show the effect of MSF. Here, stuck-at 0 occurs at line L_1 and stuck-at 1 at line L_3 in level 4. The input test vector $\langle 1\ 0\ 1 \rangle$ produces the faulty output $\langle 0\ 0\ 1 \rangle$ instead of fault-free output $\langle 1\ 0\ 1 \rangle$.

2) Bridging Fault model: The bridging fault is presented if the two or more lines of the circuit are shorted together unintentionally. Due to the shorted connection, the faulty output is generated in the circuit [20]. The bridging faults are categorized by wired-OR and wired-AND bridging faults [4] based on the logical effects of the shorted lines. The bridging fault relates to two or more lines. If only two lines are shorted together, then it refers to a single bridging fault (SBF). If more than two lines are shorted, it refers to multiple bridging faults (MBF). In 2007, Rahaman et al. [9] stated that the test set is capable of detecting the bridging faults in reversible circuits if a test set generates the opposite logic value at every pair of lying in the same level. Fig. 3 (c) and (d) show the effect of SBF and MBF in $ham3_tc$ benchmark circuit, respectively.

In Fig. 3 (c), AND single bridging fault (SBF) occurs between the lines L_1 and L_2 represented as $\{L_1 \leftrightarrow L_2\}$ at level 3. Due to this fault, the applied test vector at the initial level is $\langle 0\ 1\ 0 \rangle$, then the fault-free/faulty output would be $\langle 0\ 0\ 1 \rangle$/$\langle 0\ 1\ 1 \rangle$. The multiple bridging faults (MBF) with the lines L_1, L_2 and L_3 represented as $\{L_1 \leftrightarrow L_2 \leftrightarrow L_3\ \}$ are shown in Fig. 3 (d). Here, the test vector $\langle 0\ 1\ 0 \rangle$ at the initial level of the circuit produces the faulty primary output $\langle 0\ 0\ 0 \rangle$ instead of fault-free output $\langle 0\ 0\ 1 \rangle$.

D. Related Work

Some of the previous work on stuck-at fault and bridging fault in reversible circuits are discussed here. In 2004, Patel et al. [6] proposed an Integer linear programming(ILP) model using binary decision variables to construct a complete minimal test set for stuck-at and cell-faults in reversible circuits. However, this method is only efficient for small circuits due to the computational complexity. For handling the large circuit, the author suggested a circuit decomposition technique. In 2008, Ibrahim et al. [12] showed an offline testing method with only 2 test vectors to detect the MSFs in reversible circuits. Here, the gate replacement technique is used with the help of some of the (k+1)-CNOT gates and (k+2)-CNOT gates. In 2011, Nayeem et al. [14] proposed an ESOP-generated circuit applied to the testable online circuit. This method is required additional CNOT gates and extended TOFFOLI gate (ETG) in the place of the original TOFFOLI gate.

In 2007, Rahaman et al. [9] proposed a method for detecting all the intra-level bridging faults in an $n \times n$ reversible circuit with d levels. This method generated the optimal test set, and the test set's cardinality is $(d \log_2 n)$. In 2007, Bubna et al. [10] proposed a DFT methodology for detecting the intra-level bridging faults and single stuck-at faults in reversible circuits with ($\lceil\ log_2 N \rceil$)+3 test vectors for N input wires. The DFT circuit is constructed by adding one extra control point and DFT wire that converted all n-bit TOFFOLI gates to (n+1)-bit TOFFOLI gates. In 2008, Sarkar et al. [11] presented a universal test set using a polynomial-time algorithm for single and multiple input stuck-at and bridging faults in reversible circuits. In 2015, Nagamani et al. [15] proposed an ATPG algorithm by the deterministic way for generating the complete test set. The generated complete test is used for detecting the single and multiple intra-level bridging faults in a reversible circuit comprising Toffoli, Peres, and Fredkin gates.

The above discussion observed that many of the approaches have either targeted a particular fault model and consider the DFT methodology for generating a complete test set to cover the faults in reversible circuits. In this work, we generate the test set based on the fault detection properties of both stuck-at and bridging faults in k-CNOT reversible circuits. Next, we constructed an augmented k-CNOT circuit. The main objective for constructing the augmented k-CNOT circuit is that the same test vector is propagated to each subsequent level of the circuit to detect all possible stuck-at and bridging faults. The constructed augmented circuit maintains the parity preserving property for detecting the stuck-at and bridging faults. For this purpose, we consider the CUT circuit which comprises the additional k-CNOT gate

III. Proposed Method

In this section, we generate a test set of TS depending on the fault detection properties of stuck-at faults and bridging faults in reversible circuits. To evaluate all possible faults of the circuit, we need the proper testing mechanism for generating the test vector at every level of each gate. For this purpose, the testable augmented k-CNOT circuit is constructed. Finally, we show that the test set TS is the complete test set in the constructed augmented circuit to distinguish whether the circuit is faulty or fault-free.

A. Test Set Generation

The fault detection property of stuck-at fault is that the logic value '0' and '1' are set for each line at every level of the gates. This property also satisfies the bridging faults where the opposite logic value must be present to every pair of lines lying at the same level. The proposed test generation process satisfies both the properties. Here, the test vector TV is the collection of binary inputs $\langle b_1\ b_2\ \ldots\ b_n \rangle$, for $1 \leq i \leq n$, $b_i \in \{0, 1\}$ that are applied to the input lines of the circuit. The test set is the set of test vectors for detecting all possible faults in a given reversible circuit. The detailed test generation process is explained below.

Let us consider the test set $TS = \{TV_1, TV_2,\ \ldots, TV_n\}$, where n is the total number of input lines in the circuit. The complete test generation process is shown in Fig. 4. Here, the first test vector TV_1 represents the first bit is '1', followed by (n-1) number of consecutive 0's. The second test vector TV_2 includes the first bit '0' followed by the second bit position is '1' and the rest of the (n-2) number of consecutive '0'. Similarly, the process is continued to the nth test vector TV_n, where the test vector TV_n contains (n-1) number of consecutive '0' followed by '1' at the last bit position.

Authorized licensed use limited to: SARDAR VALLABHBHAI NATIONAL INSTITUTE OF TECH. Downloaded on August 05,2025 at 10:03:53 UTC from IEEE Xplore. Restrictions apply.

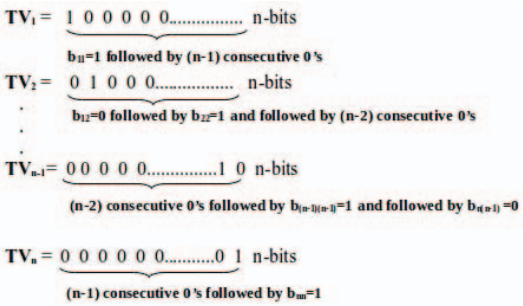

Fig. 4. Test set TS Generation Process

Example 1: Suppose we consider any k-CNOT based reversible circuit with the number of input lines n=5, then the test set $TS = \{TV_1, TV_2, TV_3, TV_4, TV_5\}$, where the test vector TV_1=$\langle 1\ 0\ 0\ 0\ 0\rangle$, TV_2=$\langle 0\ 1\ 0\ 0\ 0\rangle$, TV_3=$\langle 0\ 0\ 1\ 0\ 0\rangle$, TV_4=$\langle 0\ 0\ 0\ 1\ 0\rangle$, and TV_5=$\langle 0\ 0\ 0\ 0\ 1\rangle$.

B. Construction of Augmented k-CNOT Circuit

In a reversible circuit, the input test vector is propagated at every subsequent level of the circuit. The bit position of propagated test vector TV changes the logic value during each gate operation. For this purpose, we reconfigure the circuit that uses to the circuit under test (CUT) such that the same test vector TV is appearing or restoring in the subsequent level of the circuit.

In k-CNOT circuit augmentation, one additional line (X_e) is used and assigned the logic value '0'. An extra k-CNOT gate is added with the same structure as the original k-CNOT gate. The newly added k-CNOT gate is placed just after the actual k-CNOT gate, and it is formulated with one negate control point that occurs at line X_e. In the constructed augmented circuit, the same parity of the input test vector propagates to the primary output. Thus, the constructed augmented circuit follows the parity preserving property.

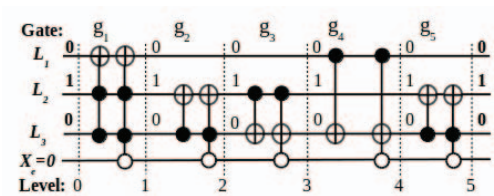

Fig. 5. Illustration of an Augmented $ham3_tc$ Circuit

Example 2: We consider the $ham3_tc$ reversible benchmark circuit. Here, the circuit consists of 5 gates and 3-input lines. This circuit is constructed to the augmented circuit as shown in Fig. 5. As per the proposed test set generation process, the test set $TS = \{TV_1, TV_2, TV_3\}$ is generated for this circuit. Here, TV_1=$\langle 1\ 0\ 0\rangle$, TV_2=$\langle 0\ 1\ 0\rangle$, and TV_3=$\langle 0\ 0\ 1\rangle$. Fig. 5 shows that the test vector TV_2=$\langle 0\ 1\ 0\rangle$ is restored in each level of every k-CNOT gate in the circuit.

C. Fault Detection for Stuck-at Fault

The fault detection property for stuck-at faults in the reversible circuit is that when each line at every level can be set to both logic value 0 and 1 by the test set [6]. To satisfy the fault detection property for stuck-at fault, the required test vectors TV_i are generated by the test set TS. Therefore, the generated test set TS considered as a complete test set. For detecting the stuck-at faults in each subsequent level of the circuit, the test vector $TV_i \in TS$ is applied to the testable augmented k-CNOT circuit. Based on the behavior of an augmented k-CNOT circuit, the test vector TV_i at the primary output level always differs from the initial level of the circuit if any stuck-at fault(s) occurs in the circuit. The fault detection process for stuck-at fault is explained with the help of the following examples.

Example 3: Fig. 6.(a) shows the effect of a single stuck-at fault in $ham3_tc$ reversible circuit, where the stuck-at 0 fault occurs at line L_1 of gate g_4. If we apply the test vector TV_1=$\langle 1\ 0\ 0\rangle$ to the augmented circuit, then the expected fault-free output would be $\langle 1\ 0\ 0\rangle$, but due to the presence of stuck-at 0 fault, the testable augmented circuit generated different test vector $\langle 0\ 0\ 1\rangle$ at the primary output level.

Example 4: Fig. 6.(b) shows the effect of multiple stuck-at fault in $ham3_tc$ reversible circuit, where the stuck-at 0 and stuck-at 1 are occur at line L_1 and L_3 of gate g_4, respectively. Similarly, the test vector TV_1=$\langle 1\ 0\ 0\rangle$ is applied to the augmented circuit, then the expected fault-free output would be $\langle 1\ 0\ 0\rangle$, but due to the presence of multiple stuck-at faults at gate g_4, the different test vector $\langle 0\ 0\ 1\rangle$ is generated at the primary output level.

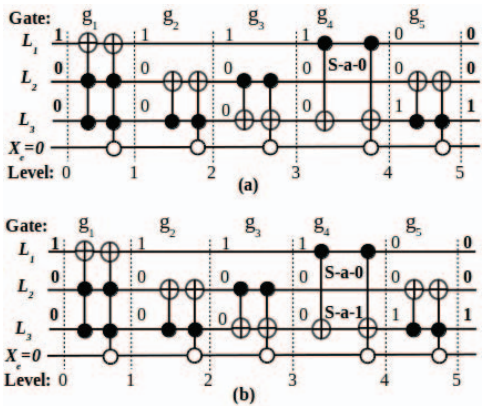

Fig. 6. Augmented $ham3_tc$ Circuit: (a) Stuck-at-0 occurs at line L_1 of g_4 (b) Stuck-at 0 and Stuck-at 1 occur at line L_1 and L_3 of g_4

Lemma 1: The test set TS is sufficient to detect all the stuck-at faults in the testable augmented k-CNOT based circuit.

Proof: Let us assume a reversible circuit with n number of lines L=$\{L_1, L_2, \ \ldots, L_n\}$. The test set TS=$\{TV_1, TV_2, \ \ldots, TV_n\}$ and size of test vector $TV_i \in TS$ is n. Based on the test set generation process, the 1st test vector TV_1=$\langle 1\ 0\ 0\ \ldots 0\ 0\ 0\rangle$, contains b_{11}=1 followed by

Authorized licensed use limited to: SARDAR VALLABHBHAI NATIONAL INSTITUTE OF TECH. Downloaded on August 05,2025 at 10:03:53 UTC from IEEE Xplore. Restrictions apply.

$(n-1)$ consecutive 0's. Due to the binary encoding pattern, the test vector TV_1 is capable of detecting a stuck-at-0 fault at line L_1 and stuck-at-0 faults at all other remaining lines $L \setminus \{L_1\}$. Similarly, the 2nd test vector TV_2=$\langle 0\ 1\ 0\ \ldots 0\ 0\ 0 \rangle$, contains the first bit b_{12}=0 followed by the second bit b_{22}=1 and followed by $(n-2)$ consecutive 0's. Thus, TV_2 can detect the stuck-at-0 fault at line L_2 and stuck-at-1 faults at all other remaining lines $L \setminus \{L_2\}$. With the similar reasoning, the nth test vector TV_n=$\langle 0\ 0\ 0\ \ldots\ 0\ 0\ 1 \rangle$, contains $(n-1)$ consecutive 0's followed by last bit b_{nn}=1, which can detect the stuck-at-0 fault at the line L_n and stuck-at-1 faults at all other lines $L \setminus \{L_n\}$. Here, every test vector TV_i in TS propagate to each subsequent level in the augmented k-CNOT circuit. Hence, the test set TS is the complete test set set for detecting all possible stuck-at faults.

D. Fault Detection for Bridging Fault

The detection of bridging fault property is two shorted lines are set by the opposite logic values 0 and 1 within the same level in a given reversible circuit. The generated test vector $TV_i \in TS$ is capable of satisfying the fault detection property of bridging faults in a reversible circuit. To detect all possible bridging faults in each level of the circuit, the generated test set TS must be applied to augmented k-CNOT based circuit. We are illustrating the fault detection process for the bridging faults with the following examples.

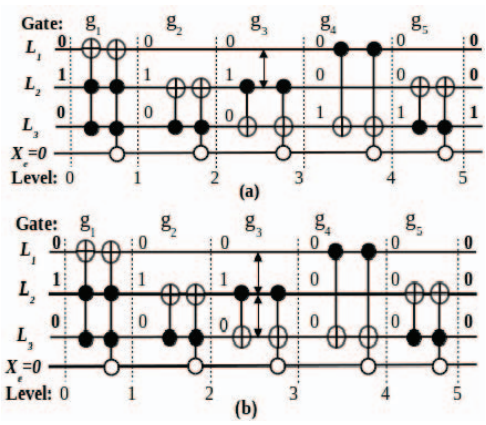

Fig. 7. Augmented $ham3_tc$ Circuit: (a) Single AND bridging fault at line L_1 and L_2 of gate g_3 (b) Multiple AND bridging faults at line L_1, L_2 and L_3 of g_3

Example 5: Fig. 7.(a) illustrates the single bridging fault occurs between the two lines L_1 and L_2 represented as $\{L_1 \leftrightarrow L_2\}$, which occurs gate g_3 in $ham3_tc$ reversible circuit. The test vector TV_2=$\langle 0\ 1\ 0 \rangle$ is applied to the testable augmented circuit; the circuit evaluates the output $\langle 0\ 0\ 1 \rangle$ instead of fault-free output $\langle 0\ 1\ 0 \rangle$ at the primary output level due to the presence of a single bridging fault.

Example 6: The multiple bridging faults occur between L_1, L_2 and L_3 of gate g_3 in $ham3_tc$ reversible circuit, as shown in Fig. 7.(b). After applying the test vector TV_2=$\langle 0\ 1\ 0 \rangle$ to the augmented circuit, the output $\langle 0\ 0\ 0 \rangle$ is generated at the primary output level, which is not matched with the initial input test vector TV_2=$\langle 0\ 1\ 0 \rangle$.

Lemma 2: The test set TS is also sufficient to detect all the bridging faults in the testable augmented k-CNOT based circuit.

Proof: Let us consider the test set TS=$\{TV_1, TV_2,\ \ldots, TV_n\}$ is defined in similar manner as mentioned in Lemma 1. Here, the test vector TV_1 generated the opposite logic values between each pair of line L_1 with the remaining lines $L \setminus \{L_1\}$. Therefore, the test vector TV_1 can also detect all the single bridging faults $\{L_1 \leftrightarrow L_2, L_1 \leftrightarrow L_3,\ \ldots, L_1 \leftrightarrow L_n\}$. In the same analogy, test vector TV_2 is capable of detecting all the single bridging faults $\{L_2 \leftrightarrow L_1, L_2 \leftrightarrow L_3,\ \ldots, L_2 \leftrightarrow L_n\}$ because the opposite logic values exist between each pair of line L_2 and the remaining lines $L \setminus \{L_2\}$. In similar manner, the nth test vector TV_n detects all the single bridging faults $\{L_1 \leftrightarrow L_n, L_2 \leftrightarrow L_n,\ \ldots, L_{n-1} \leftrightarrow L_n\}$ due to the last bit b_{nn} at line L_n creates the opposite logic values with the other lines.

IV. Results and Discussion

The proposed fault detection method has been applied on various benchmark circuits in [21]. The experimental results are compared with some of the existing works carried out for stuck-at and bridging faults [9], [11], [15] and these are reported in Table I, Table II and Table III, respectively.

The result of the proposed work is compared with the work of [9], and it is tabulated in Table I. It is observed that the proposed work detects more number of bridging faults and the number of test vectors is 45.30% reduction on average as compared to the existing work of [9].

TABLE I
Comparison of the number of faults and test vectors with [9]

Benchmark Circuit	No. of Inputs/ Outputs	No. of Faults [9]	No. of Faults [Proposed]	No. of Test Vectors [9]	No. of Test Vectors [Proposed]
		SBF	SBF+MBF		
ham3tc	3/3	18	48	3	3
graycode6	6/6	90	684	9	6
4_49	4/4	78	286	5	4
ham7tc	7/7	504	5760	22	7
rd32	4/4	30	110	6	4
Xor5d1	5/5	50	260	8	5

Table II shows the comparative analysis of our result with the result of [11]. The proposed work considered all possible single and multiple stuck-at and bridging faults, but the work in [11] only considered the single and multiple input stuck-at and bridging faults. It is found that the size of the test vectors of our proposed work is equal when compared to the work of [11], but the present work covers more number of faults.

The result of Table III shows the comparison of the present work with the work of [15]. Here, it is observed that the average number of test vectors generated by our proposed method is that 58.33% larger than the existing work of [15]. In comparison with the number of detectable faults, our method

Authorized licensed use limited to: SARDAR VALLABHBHAI NATIONAL INSTITUTE OF TECH. Downloaded on August 05,2025 at 10:03:53 UTC from IEEE Xplore. Restrictions apply.

TABLE II
COMPARISON OF THE NUMBER OF FAULTS AND TEST VECTORS WITH [11]

Benchmark Circuit	No. of Inputs/ Outputs	No. of Faults [11]		No. of Faults [Proposed]		No. of Test Vectors [11]	No. of Test Vectors [Proposed]
		SAF	SBF+MBF	SAF	SBF+MBF		
6sym	6/1	12	90	126	42546	6	6
9sym	9/1	18	352	170	236814	9	9
hwb7	7/7	14	152	2320	69600	7	7
hwb8	8/8	16	238	5776	303810	8	8
hwb6	6/6	12	90	964	21736	6	6
rd73	7/3	14	152	122	42546	7	7
rd84	8/4	16	238	170	1899616	8	8
ham15	15/15	30	1848	998	8712032	15	15
mod1024adder1	20/20	40	4598	590	117438160	20	20

covers more number of faults along with the stuck-at faults as compared to the result of [15].

TABLE III
COMPARISON OF THE NUMBER OF FAULTS AND TEST VECTORS WITH [15]

Benchmark Circuit	No. of Inputs/ Outputs	Total Detectable Faults [15]	Total Detectable Faults [Proposed]	No. of Test Vectors [15]	No. of Test Vectors [Proposed]
		SBF+MBF	SBF+MBF		
4_49	4/4	143	286	3	4
graycode6	6/6	342	684	3	6
mod5adder-15	6/6	912	1824	4	6
ham7tc	7/7	2880	5760	4	7
rd73d2	7/3	21273	42546	2	7
rd84d1	8/4	949808	1899616	5	8
hwb9-1544	9/9	775590	780610	7	9
hwb10-3631	10/10	3679216	7358432	8	10

V. CONCLUSION

This paper presents the fault detection method for single and multiple stuck-at and bridging faults in a given reversible circuit. For this purpose, the test set is generated based on the fault detection property for stuck-at and bridging fault in the reversible circuits. Next, the generated test set is applied to the constructed augmented k-CNOT circuit for detecting the faults in each level of the circuit. In this work, if the Circuit Under Test (CUT) contains n number of input lines and m number of k-CNOT gates, then the augment circuit would comprise n+1 input lines and $2m$ number of k-CNOT gates. The hardware overhead is almost double, but the approach is applicable for large circuits and experimental results show 100% fault coverage. Moreover, the proposed fault detection method covers more faults than the earlier works.

The proposed fault detection method may be extended to the other fault models in reversible circuits. The same test vectors are propagated from the input level to the primary output level in the augmented k-CNOT circuit, so there is a possibility to extend our work for localizing the faults under different fault models in reversible circuits.

REFERENCES

[1] R. Landauer, "Irreversibility and heat generation in the computing process," IBM journal of research and development, vol. 5, no. 3, 1961, pp.183–191.

[2] C. H. Bennett, "Logical reversibility of computation," IBM J. Res. Dev., vol. 17, no. 6, pp. 525–532, November 1973.

[3] W.D. Pan and M. Nalasani, "Reversible logic," IEEE Potentials, vol. 24, no. 1, pp. 38–41, 2005.

[4] N. K. Jha and S. Gupta, "Testing of digital systems," Cambridge University Press, 2003.

[5] J. Rice, An overview of fault models and testing approaches for reversible logic, in Communications, Computers and Signal Processing (PACRIM), 2013 IEEE Pacific Rim Conference on. IEEE, 2013, pp.125–130.

[6] K. N. Patel, J. P. Hayes, and I. L. Markov, "Fault testing for reversible circuits," Computer-Aided Design of Integrated Circuits and Systems,IEEE Transactions on, vol. 23, no. 8, 2004, pp. 1220–1230.

[7] J. P. Hayes, I. Polian, and B. Becker, "Testing for missing-gate faults in reversible circuits," IEEE Asian Test Symposium, pp. 100–105, 2004.

[8] I. Polian, J. P. Hayes, T. Fienn, and B. Becker,"A family of logical fault models for reversible circuits," IEEE Asian Test Symposium, pp.422–427, 2005.

[9] H. Rahaman, D. K. Kole, D. K. Das, and B. B. Bhattacharya, "Optimum test set for bridging fault detection in reversible circuits," in Asian Test Symposium, 2007. ATS07. 16th. IEEE, 2007, pp. 125–128.

[10] M. Bubna, N. Goyal, and I. Sengupta, "A DFT methodology for detecting bridging faults in reversible logic circuits," in TENCON 2007-2007 IEEE Region 10 Conference. IEEE, 2007, pp. 1–4.

[11] P. Sarkar, S. Chakrabarti, "Universal test set for bridging faults detection in reversible circuit ," in 2008 3rd International Design and Test Workshop," IEEE, 2008, pp.51–56.

[12] M. Ibrahim, A. R. Chowdhury, and H. M. H. Babu, "Minimization of cts of k-cnot circuits for ssf and msf model," in 2008 IEEE International Symposium on Defect and Fault Tolerance of VLSI Systems, IEEE, 2008, pp. 290–298.

[13] D. K. Kole, H. Rahaman, D. K.Das and B. B. Bhattacharya, "Derivation of Optimal Test Set for Detection of Multiple Missing-Gate Faults in Reversible Circuits," IEEE Asian Test Symposium, pp.33-38, 2010.

[14] N. Nayeem and J. Rice, "A simple approach for designing online testable reversible circuits," in Communications, Computers and Signal Processing (PacRim), 2011 IEEE Pacific Rim Conference on. IEEE, 2011, pp. 8590.

[15] A. Nagamani, B. Abhishek, and V. K. Agrawal, "Deterministic approach for Bridging fault detection in Peres-Fredkin and Toffoli based Reversible circuits," in 2015 IEEE International Conference on Computational Intelligence and Computing Research (ICCIC). IEEE, 2015, pp. 1-6.

[16] R.P. Feynman, "Quantum mechanical computers," Foundation of Physics, Vol. 16, No. 6, pp.507–553, 1986.

[17] T.Toffoli, "Reversible computing," In: J. Bakker, J. Leeuwen, (eds.) ICALP 1980, LNCS, Springer, Heidelberg, vol. 85, pp. 632–644, 1980.

[18] M. A. Nielson and I. L. Chuang, "Quantum Computation and Quantum Information," Monograph Collection (Matt - Pseudo), 2000.

[19] D. Maslov, G.W. Dueck, "Improved quantum cost for n-bit Toffoli gates," IEE Electron. Lett. 39, 1790, 2004.

[20] K. C. Mei, "Bridging and stuck-at faults," IEEE Transactions on Computers, vol.100, no. 7, pp.720–727, 1974.

[21] D. Maslov, G. Dueck, and N. Scott, Reversible Logic synthesis Benchmark Page. www.cs.uvic.ca/ dmaslov/, 2004.

Authorized licensed use limited to: SARDAR VALLABHBHAI NATIONAL INSTITUTE OF TECH. Downloaded on August 05,2025 at 10:03:53 UTC from IEEE Xplore. Restrictions apply.